DECA Lab Logbook

Part 1 | Section 3: Sequential Circuits

Section 3: Sequential Circuits

Aim

To design and simulate sequential logic circuits — circuits that store state — using D-type flip-flops (DFFs) and a clock in Issie. This section builds a 4-bit register, a binary counter, a counter with synchronous load, and a countdown timer with auto-reset.

Background: D-type Flip-Flop

The basic unit of information storage in digital circuits. The DFF samples its input D on the rising edge of the clock and holds that value on output Q until the next rising edge. In Issie, all clocked components share a global clock that is connected automatically.

D	Clock	Q
X	0 or 1	No change
1	Rising edge (↑)	1
0	Rising edge (↑)	0

4-bit Register (DFF4)

Circuit Description

A 4-bit register built from four D-type flip-flops. Captures a 4-bit input D(3:0) on every rising clock edge and holds the value on output Q(3:0) until the next tick.

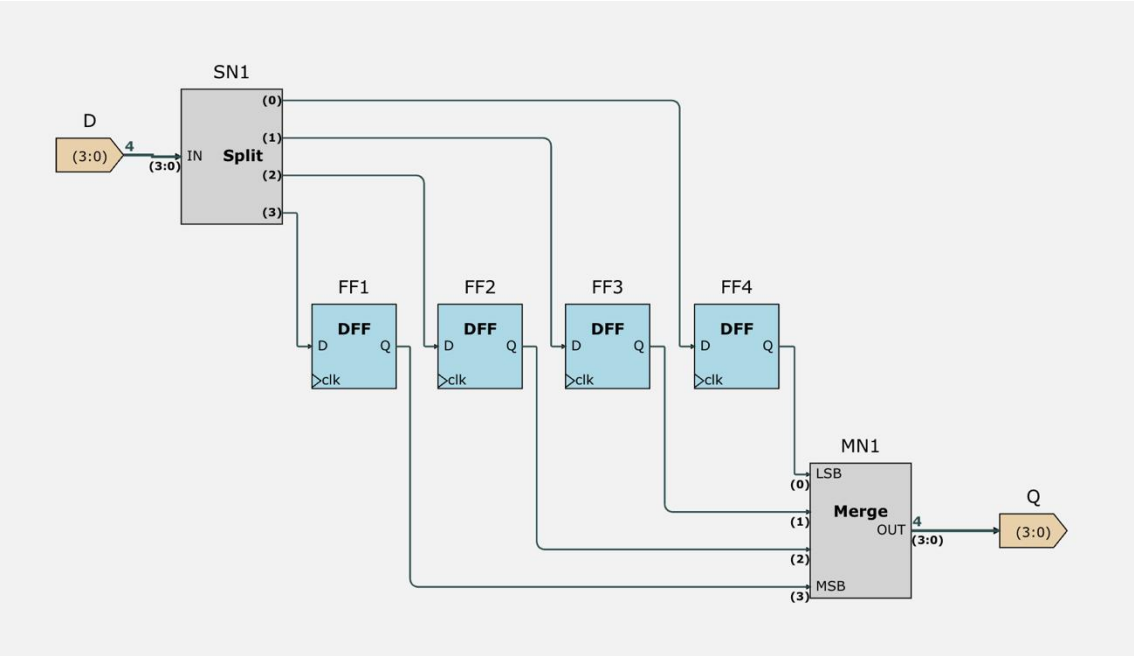

Components

- 4-bit input D(3:0), 4-bit output Q(3:0)
- Four DFF components (global clock connected automatically in Issie)
- BusSelect to split D into individual bits; MergeWires to recombine Q bits

How It Works

Each DFF stores one bit. On a rising clock edge all four DFFs simultaneously latch their respective D inputs. Q holds the previously stored value and only updates on the next clock tick.

Simulation

Step-simulated in Issie: D was set to various values and Q was confirmed to update after each clock tick. The stateful component values in the simulation tab showed the stored state at all times.

4-bit Binary Counter (CTR4)

Circuit Description

A counter that increments by 1 on every clock tick, built by connecting a DFF4 register and a FA4 adder in a feedback loop. The adder computes Q + 1 and feeds the result back into the register input.

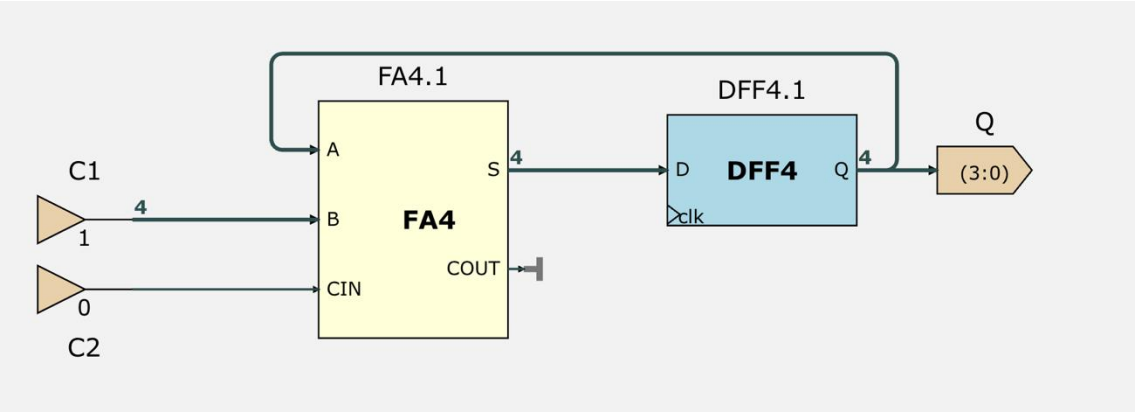

Components

- DFF4 register
- FA4 4-bit adder
- Constant 1 (4-bit, value 1) at adder input B
- Constant 0 (1-bit) at adder CIN
- Not Connected component terminating the unused COUT output

How It Works

Q is the current count. FA4 computes Q + 1 each cycle. Its output S becomes the next D input to DFF4. On the next clock tick, DFF4 latches Q + 1. When Q reaches 1111 (decimal 15), the 4-bit adder overflows and wraps back to 0000.

Wave Simulation

The wave simulation timing diagram confirms the output increments by 1 each clock interval. Adding the FA4 sum port to the wave view shows S = Q + 1 at all times — the register records the adder output on each rising clock edge and holds it, while the adder output immediately updates to the new value plus 1.

Counter with Synchronous Load

Circuit Description

The counter is extended with a load capability. A MUX2X4 is inserted between the adder/D-input path and DFF4. When LD = 0 the counter counts normally; when LD = 1 the register loads an external value D on the next clock tick.

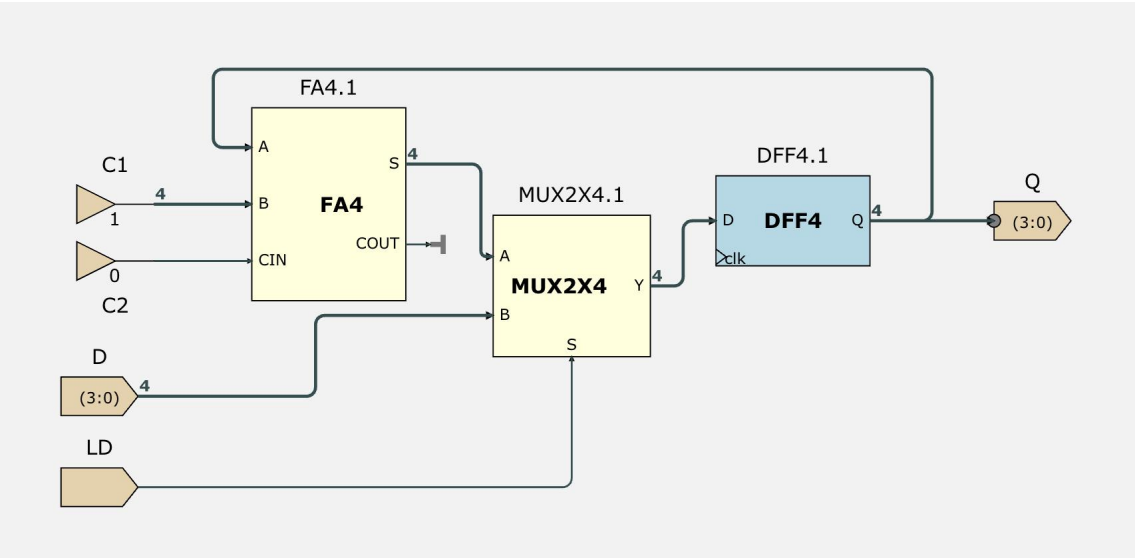

Components

- Based on CTR4, adding MUX2X4 between adder output / load input and DFF4
- 4-bit load input D(3:0) and 1-bit control LD

How It Works

LD = 0: MUX passes the adder output (Q + 1) to DFF4 — normal counting.

LD = 1: MUX passes external input D to DFF4 — Q jumps to D on the next tick, then resumes counting from D.

Simulation

LD	Behaviour
0	Counts up: Q → Q + 1 on each clock tick
1	Loads preset: Q → D on next clock tick, then resumes from D

Challenge: Countdown Timer with Auto-Reset

Aim

Convert the counter with synchronous load into a countdown timer that decrements from a preset value D and automatically reloads when it reaches zero, producing a repeating period of D + 1 clock ticks.

Components

- Based on counter with synchronous load

- Constant C1 changed from 0001 to 1111 — adding 1111 = subtracting 1 via two's complement overflow
- Bus Compare (reduction NOR — outputs 1 when all bits are 0) replaces the manual LD signal

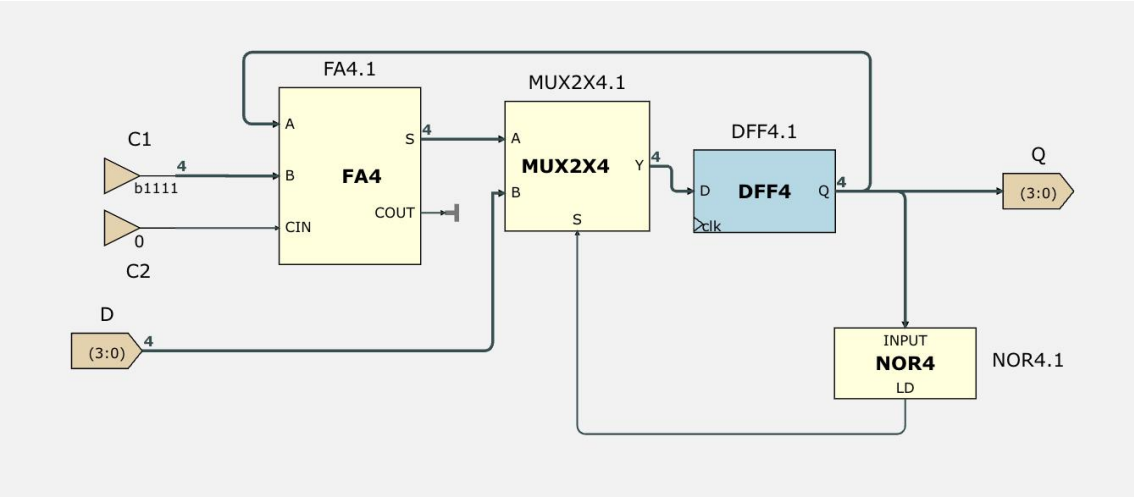

How It Works

FA4 now computes Q + 1111 = Q − 1. The Bus Compare block outputs 1 whenever Q = 0000, which automatically asserts LD, causing the MUX to select D and reload the preset value on the next clock tick. This creates a repeating sequence: D, D−1, D−2, …, 1, 0, D, D−1, … with period D + 1 ticks.

Auto-reset Logic

Q value	Bus Compare output (LD)	Next Q
Non-zero	0	Q − 1 (count down)
0000	1	D (auto-reload)

Simulated and confirmed: the output repeats every D + 1 clock ticks. The Bus Compare block correctly detects Q = 0 and triggers the reload one cycle before Q would underflow.